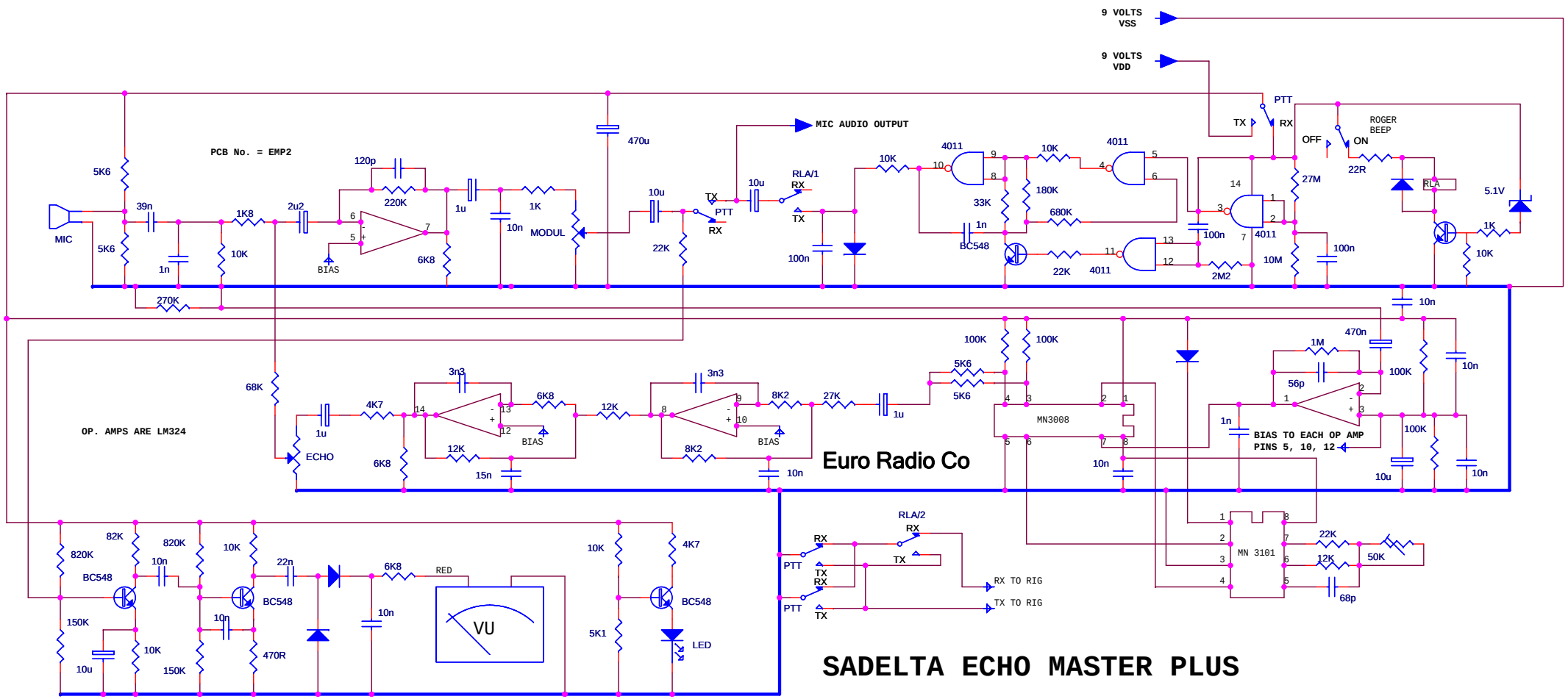

DRAWING BY: Rick Jackson Euro Radio Co		
Title SADELTA ECHO MASTER PLUS		
Size B	Document Number SADELTA ECHO MASTER PLUS.SCH	Rev A1
Date: Wednesday, June 07, 2006	Sheet 1 of 1	