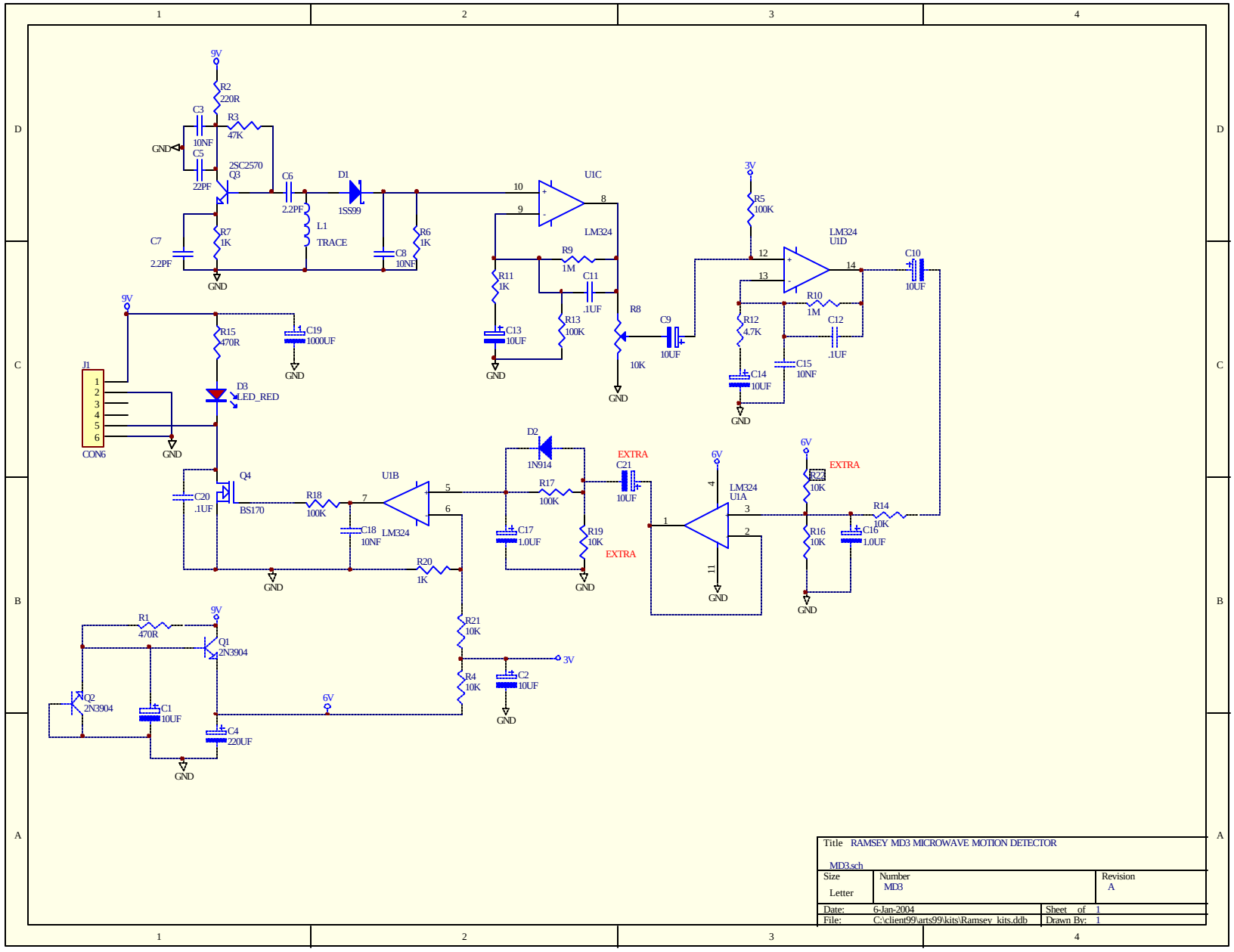

Title RAMSEY MD3 MICROWAVE MOTION DETECTOR		
MD3.sch		
Size Letter	Number MD3	Revision A
Date: 6-Jan-2004	Sheet of 1	
File: C:\client99\arts99\kits\Ramsey_kits.ddb	Drawn By: 1	