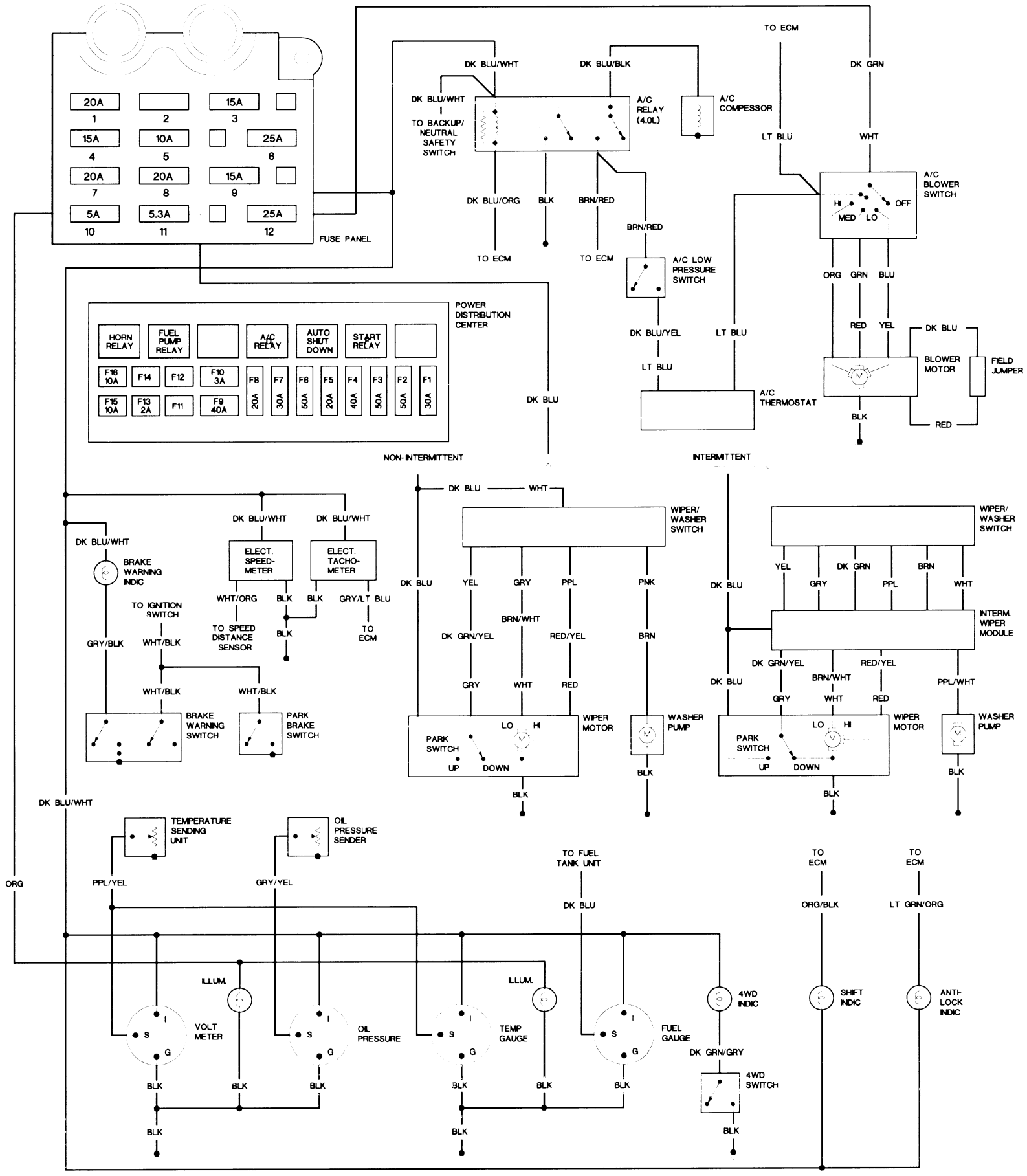
20A 1
2
15A 3
15A 4
10A 5
25A 6
20A 7
20A 8
15A 9
5A 10
5.3A 11
25A 12
FUSE PANEL
DK BLU/WHT
DK BLU/BLK
DK BLU/WHT
TO BACKUP/ NEUTRAL SAFETY SWITCH
A/C RELAY (4.0L)
A/C COMPESSOR
TO ECM
DK GRN
LT BLU
WHT
A/C BLOWER SWITCH
HI
MED
LO
OFF
DK BLU/ORG
BLK
BRN/RED
TO ECM
TO ECM
BRN/RED
A/C LOW PRESSURE SWITCH
ORG
GRN
BLU
RED
YEL
DK BLU
BLOWER MOTOR
FIELD JUMPER
BLK
RED
DK BLU/YEL
LT BLU
LT BLU
A/C THERMOSTAT
POWER DISTRIBUTION CENTER
HORN RELAY
FUEL PUMP RELAY
A/C RELAY
AUTO SHUT DOWN
START RELAY
F16 10A
F14
F12
F10 3A
F8 20A
F7 30A
F6 50A
F5 20A
F4 40A
F3 50A
F2 50A
F1 30A
F15 10A
F13 2A
F11
F9 40A
DK BLU
NON-INTERMITTENT
INTERMITTENT
DK BLU
WHT
WIPER/ WASHER SWITCH
DK BLU
YEL
GRY
PPL
PNK
BRN/WHT
DK GRN/YEL
RED/YEL
BRN
GRY
WHT
RED
PARK SWITCH
UP
DOWN
LO
HI
WIPER MOTOR
WASHER PUMP
BLK
BLK
WIPER/ WASHER SWITCH
YEL
DK GRN
BRN
DK BLU
GRY
PPL
WHT
INTERM. WIPER MODULE
DK GRN/YEL
RED/YEL
DK BLU
BRN/WHT
PPL/WHT
GRY
WHT
RED
PARK SWITCH
UP
DOWN
LO
HI
WIPER MOTOR
WASHER PUMP
BLK
BLK
DK BLU/WHT
DK BLU/WHT
DK BLU/WHT
BRAKE WARNING INDIC
ELECT. SPEED-METER
ELECT. TACHO-METER
WHT/ORG
BLK
BLK
GRY/LT BLU
TO IGNITION SWITCH
TO SPEED DISTANCE SENSOR
BLK
TO ECM
GRY/BLK
WHT/BLK
WHT/BLK
WHT/BLK
BRAKE WARNING SWITCH
PARK BRAKE SWITCH
DK BLU/WHT
TEMPERATURE SENDING UNIT
OIL PRESSURE SENDER
ORG
PPL/YEL
GRY/YEL
TO FUEL TANK UNIT
DK BLU
TO ECM
ORG/BLK
TO ECM
LT GRN/ORG
ILLUM.
ILLUM.
4WD INDIC
SHIFT INDIC
ANTI-LOCK INDIC
VOLT METER
OIL PRESSURE
TEMP GAUGE
FUEL GAUGE
DK GRN/GRY
4WD SWITCH
BLK
BLK
BLK
BLK
BLK
BLK
BLK
BLK
BLK