RevNo	Revision note	Date	Signature	Checked

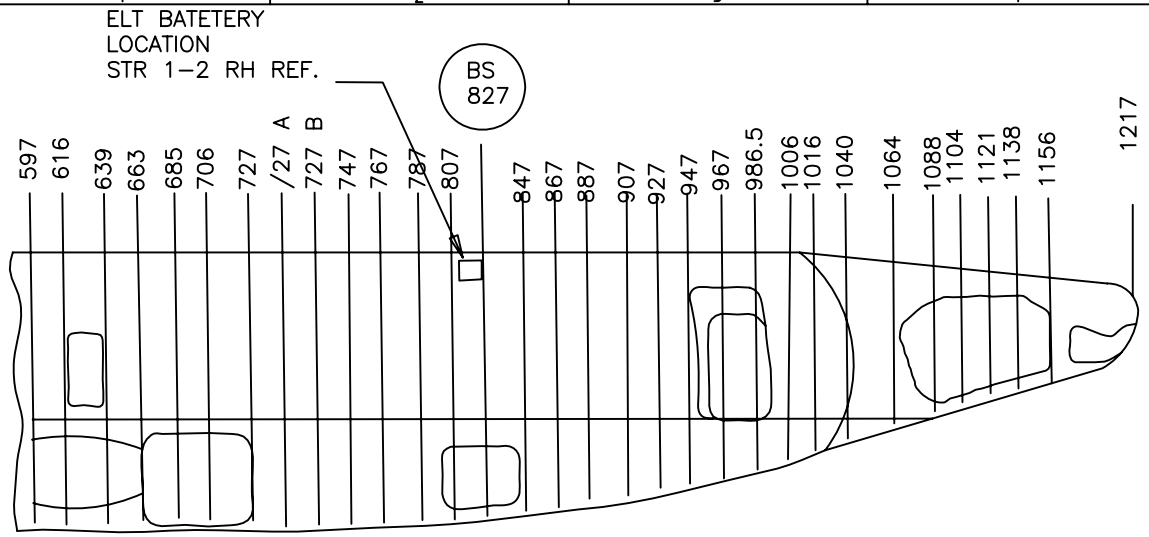

AFT FUSELAGE SECTION
E.L.T. INSTALATION AREA

GENERAL NOTES :

1.– INSTALLATION GUIDANCE CAN BE FOUND IN FAA ADVISOR CIRCULAR 43.13–1B/2A (ACCEPTABLE METHODS,THECNIQUES AND PRACTICES–AIRCRAFT ALTERNATIONS).CHAPTER 2 ,PARAGRAPH 28 DEALS SPECIFICALLY WITH EMERGENCY TRANSMITER INTALLATION, AND AC.43.13–2A,CHAPTER 3 , PARAGRAPHS 36 THOUGH 38 PROVIDES ADDITIONAL GUIDANCE FOR ANTENNA INSTALLATION , IN ADDITION THE FAA GUIDELINES FOR MOUNTING AND E.L.T. (PER RTCA DO –183 SEC.3.18).
2.– MICROINCH SURFACE FINISH TYPIPAL 125–MICROINCHES , BREAK ALL SHARP EDGES 0.020/.030 INCHES RADIUS , SHM AS REQUERED TO RELIEVE PRELOAD .
3.– PROYECT REWORK AREA AGAINST COORROSION PER RTCA DO PER STRUCTURAL REPAIR MANUAL (SRM)BOENG B7 CHAPTER 51 .USE ALDODINE 12015(PER MIL–C–5541 CLASS 1A). AND TWO COATS OF EPOXI POLYAMIDE PRIMER (PER MIL –P–23337 TYPE I).
4.– SEAL STRUCTURAL REWORK PER SRM CHAPTER 51–20–4 AS REQUERIED.
5.– PROTEC AGAINST DISSIMLAR METAL PER B737 SRM CHAPTER 51–10–2.
6.– ATTACHMENTS LOCATED FROM PARTS EDGES. 2D+.60 FOR DETAILS 2DMINIMUM ACCPTABLE

7.– ADDED ATTACHMENTS TO BE LOCETED 2D FROM JOGGLES . SPACING FOR THE ADDED ON ASSEMBLY ATTACHMENTS SHOUDL BE 4D TO 6D.
8.– INSTALL ATTACHNENTS PER COEING B737 SRM CHAPTER 51–30–2

FASTENERS NOTE:

⊕ UNIVERSAL RIVET MS20470–5–DD( )

○ 100° RIVET MS20426–4–DD( )

┼ UNIVERSAL RIVET MS20470–6–DD( )

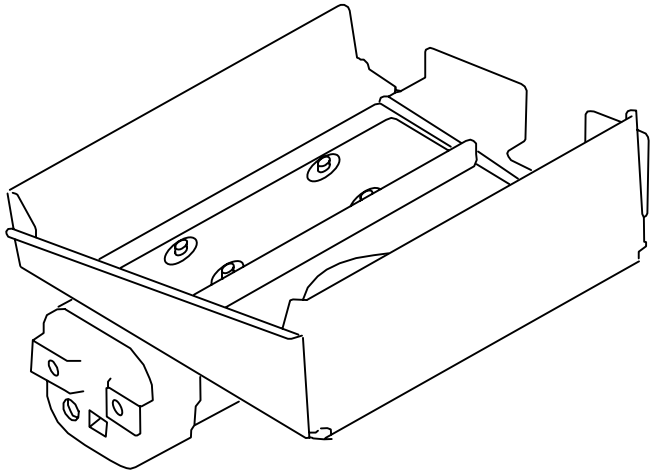

3D VIEW
ENGINEERING REF.

DETAIL OF HARDWARE PARTS, SEE WDM SUPPLEMENT REV. 23-01, 23-21-01 PAGE 2

QUANTITY REQUIRED -103	-102	-101	PART NUMBER	DESCRIPTION / SIZE / SPECIFICATION	
	-14		P/N 445-042-01	ARTEX ELT EQUIPMENT	1
		-13	P/N 110-328-01	ARTEX BLADE ANTENNA	1
	-12		7075 T6, QQ-A-250/13	BATTERY SUPPORT ANGLE 0.063x2.00x16.00	1
	-11		7075 T6, QQ-A-250/13	FRAME ANGLE 0.063x7.00x12.25	1
	-10		7075 T6, QQ-A-250/13	STIFFENER-RIB 0.063x1.00x4.00x12.00	1
	-9		7075 T6, QQ-A-250/13	STR 2RH OUTBD ANGLE 0.063x2.00x3.00x14.00	1
	-8		7075 T6, QQ-A-250/13	STR 2RH INBD ANGLE 0.063x2.00x4.00x14.00	1
	-7		7075 T6.QQ-A-250/13	LOWER PLATE 0.063x8.00x14.00	1
		-6	7075 -T62 MAKE EXTRUSION	HAT- CHANNEL (USE DIMENSIONS OF BAC 1500-6104)	1
		-5	7075 T6, QQ-A-287	CHANNEL 0.040x0.63x1.50x11.00 (EQUIV. BAC 1493-144)	2
		-4	7075 T6, QQ-A-287	PLATE 0.100x3.00x2.00"	3
		-3	7075 T6.QQ-A-287	CLIP / 0.032x3.50x2.50	4
		-2	7075 T6, QQ-A-287	CLIP / 0.040x2.50x2.40	2
		-1	7075 T6, QQ-A-287	CLIP / 0.040x2.50x2.40	2
			-103	ELT WIRING DIAGRAM	
			-102	ELT EQUIPMENT INSTALLATION	
			-101	ANTENNA STRUCTURAL INSTALLATION	

COMPUTER GENERATED DRAWING
NO MANUAL ALTERATION

DRAWING	RIVERA	LIMITS UNLESS NOTED FRACTION +/- 1/32 DECIMAL +/- 0.010 ANGLE +/- 1/2°	PROJECT	DFDR-737-02
AVIONICS	ESPINOZA		SIZE	A1
PROJECT	ALTAMIRANO		EQUIP	737

ALL DIMENSIONS ARE IN INCHES UNLESS OTHERWISE SPECIFIED

PROPIETARY NOTICE
THIS DOCUMENT CONTAINS PROPIETARY INFORMATION OF TECHNICAL DATA HAVE BEEN PREPARED FOR THE EXCLUSIVE USE OF STARPERU AIRLINES , THE PROPIETARY INFORMATION WHICH SHALL NOT BE REPRODUCED, TRANSFERRED TO OTHER DOCUMENTS, DISCLOSED TO OTHERS, USED FOR MANUFACTURING OR ANY OTHER PURPOSE WITHOUT THE WRITTEN AUTHORIZATION OF STARPERU AIRLINES

TITLE : EMERGENCY LOCATOR TRANSMITTER
ARTEX 406 MHz

APPLICABILITY : A/C MODEL: BOEING 737-2Y5
A/C SERIAL No. : 23039
A/C REG. No. : OB-1794-P

ISSUE	15 MAY 05	REV.
SCALE	NTS	INITIAL

DRAWING NUMBER
ELT-737-05-01

SHEET 1 OF 8