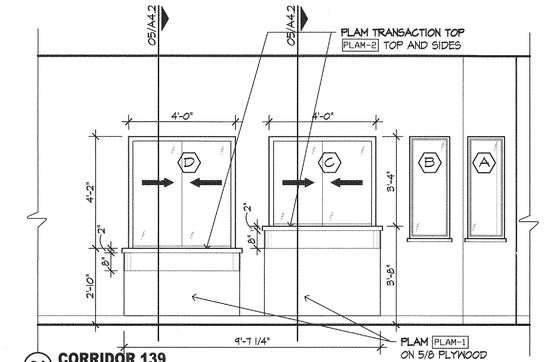

01 CORRIDOR 139
SCALE: 3/8" = 1'-0"

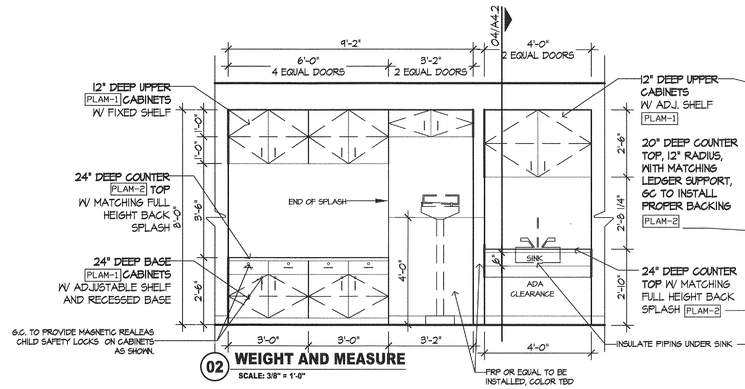

02 WEIGHT AND MEASURE
SCALE: 3/8" = 1'-0"

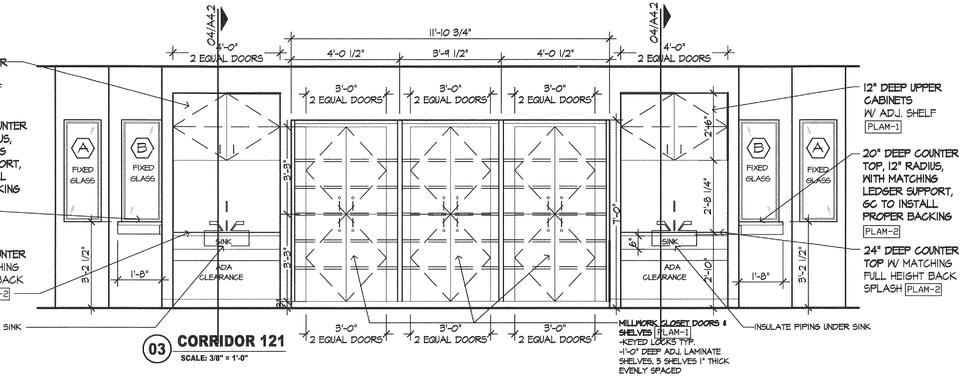

03 CORRIDOR 121
SCALE: 3/8" = 1'-0"

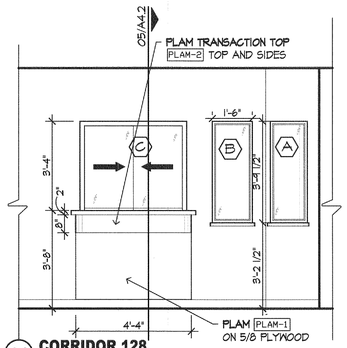

04 CORRIDOR 128
SCALE: 3/8" = 1'-0"

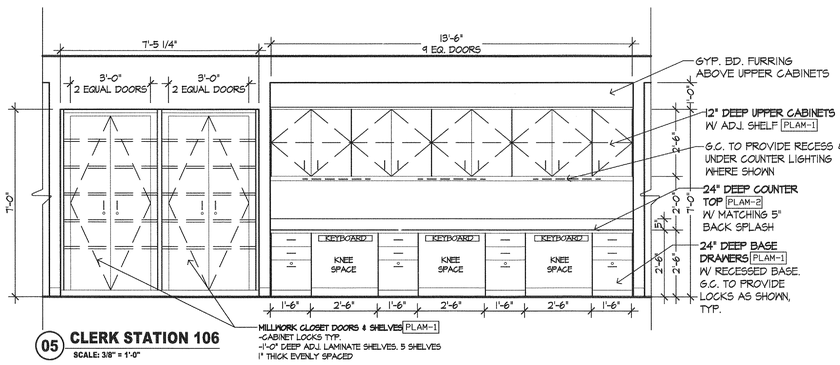

05 CLERK STATION 106
SCALE: 3/8" = 1'-0"

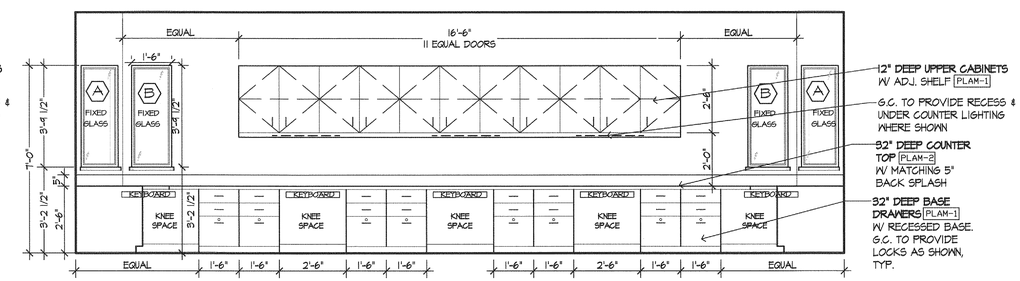

06 NURSES 108
SCALE: 3/8" = 1'-0"

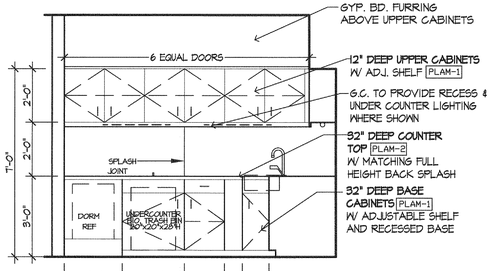

07 WORKROOM 107
SCALE: 3/8" = 1'-0"

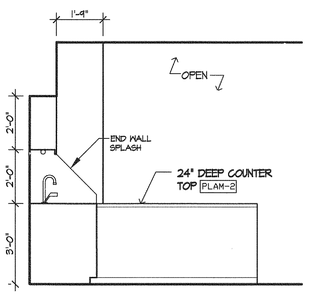

08A WORKROOM 107
SCALE: 3/8" = 1'-0"

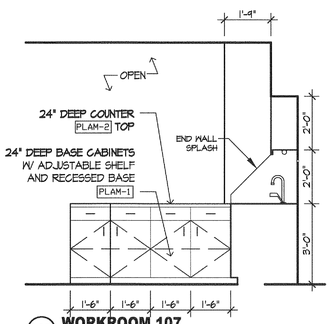

08B WORKROOM 107
SCALE: 3/8" = 1'-0"

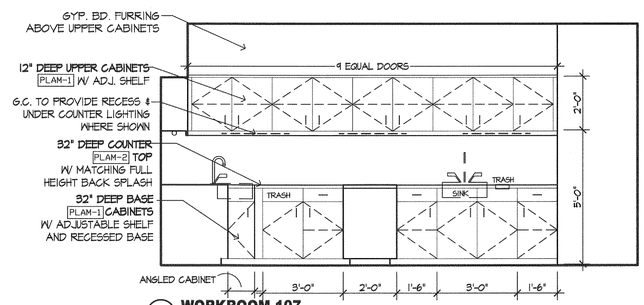

09 WORKROOM 107
SCALE: 3/8" = 1'-0"

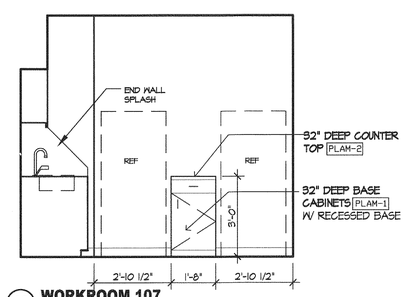

10 WORKROOM 107
SCALE: 3/8" = 1'-0"

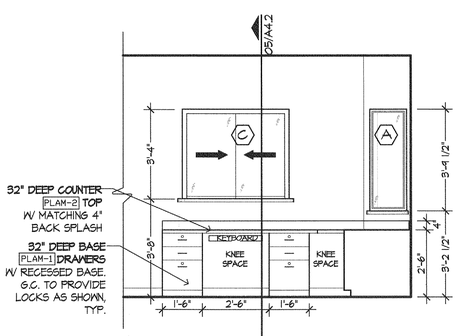

11 RECEPTION 103
SCALE: 3/8" = 1'-0"

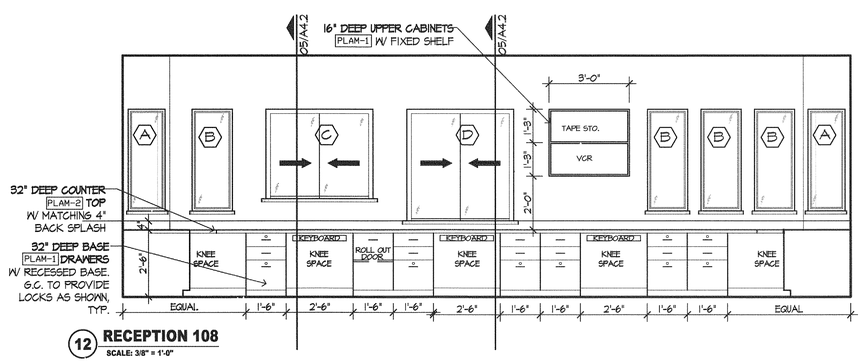

12 RECEPTION 108
SCALE: 3/8" = 1'-0"

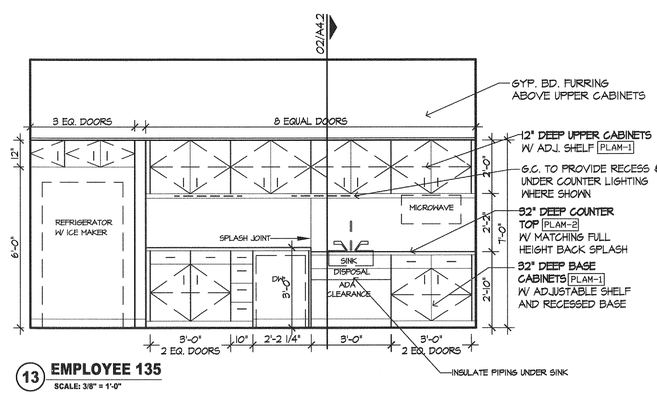

13 EMPLOYEE 135
SCALE: 3/8" = 1'-0"

MILLWORK NOTES:

-ALL MILLWORK TO BE PLAM-1 EXCEPT FOR COUNTERTOP WHICH IS TO BE PLAM-2

-RUBBER COVED BASE RBC-1 THROUGHOUT

-ALL WALLS TO BE PAINTED PT-1 U.N.O.

-ALL OUTSIDE CORNERS ON ALL TOPS SHALL HAVE A 2" RADIUS EDGE WHERE EXPOSED

-BRUSHED STAINLESS METAL WIRE PULLS ON ALL CABINETS AND DRAWERS

-DRAWERS SHALL HAVE KV-8400 FULL EXTENSION SLIDES

-CABINETS SHALL HAVE A .020 WHITE LINER OR BETTER, .050 LAMINATE OR BETTER TOPS & SPLASHES, AND .030 LAMINATE OR BETTER ON ALL VERTICALS

-ALL FILE DRAWERS MUST BE EQUIPPED TO FIT STANDARD PENDAFLEX FILE FOLDERS

NO.	DATE	REVISIONS	BY

CONTRACTOR SHALL VERIFY ALL DIMENSIONS AT THE JOB SITE AND NOTIFY THE ARCHITECTS OF ANY DIMENSIONAL ERRORS, OMISSIONS OR DISCREPANCIES BEFORE BEGINNING OR FABRICATING ANY WORK
DO NOT SCALE DRAWINGS

REGISTERED ARCHITECT STATE OF TEXAS 5490
MAR 19 2009

linear!
the architecture of Kemery Brundige and Young
8600 Freeport pkwy, Ste. 310
Irving, TX 75063
Phone: 972.929.9226
Fax: 972.929.9061
inbox@linear-architecture.com

COOK CHILDREN'S
PRIMARY CARE CLINIC
BURLESON, TX

JOB NUMBER
09.016

SHEET TITLE
INTERIOR ELEVATIONS

SHEET NUMBER
A6.0

DATE OF ORIGINAL ISSUE
© MARCH 16, 2009