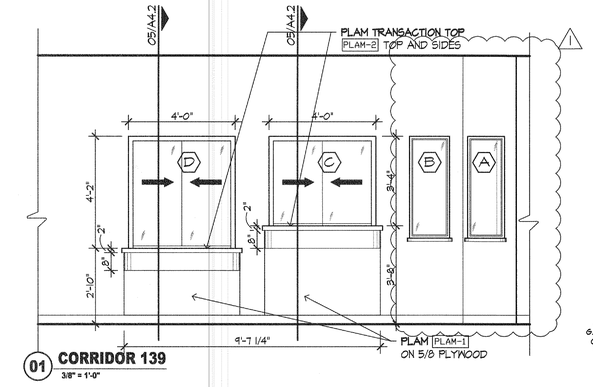

01 CORRIDOR 139
3/8" = 1'-0"

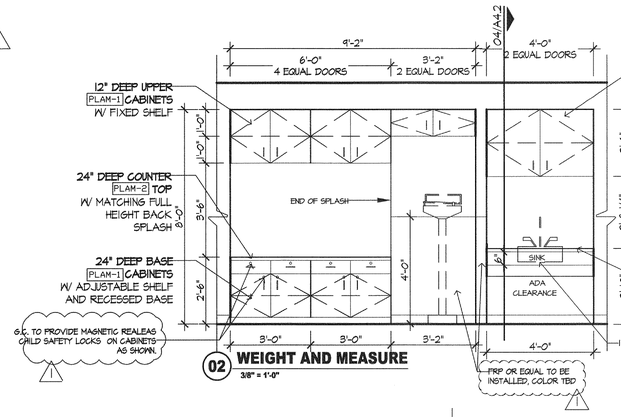

02 WEIGHT AND MEASURE
3/8" = 1'-0"

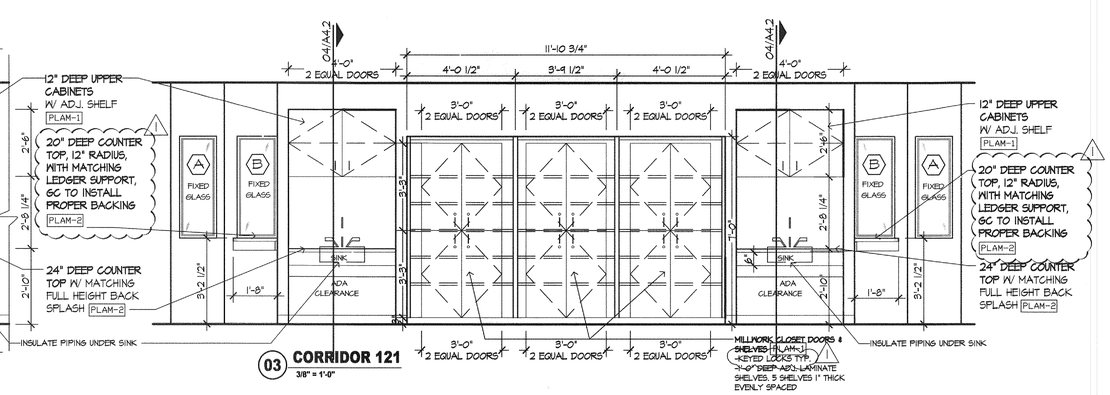

03 CORRIDOR 121
3/8" = 1'-0"

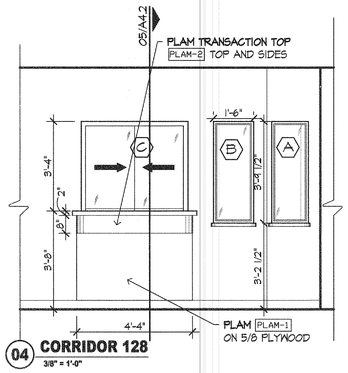

04 CORRIDOR 128
3/8" = 1'-0"

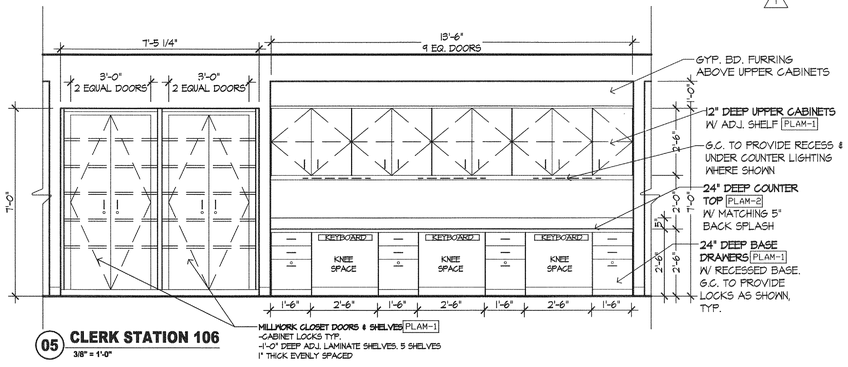

05 CLERK STATION 106
3/8" = 1'-0"

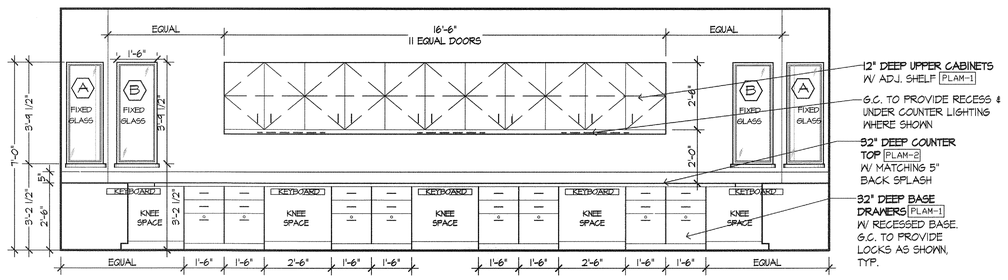

06 NURSES 108
3/8" = 1'-0"

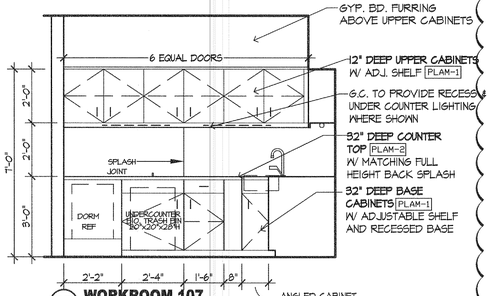

07 WORKROOM 107
3/8" = 1'-0"

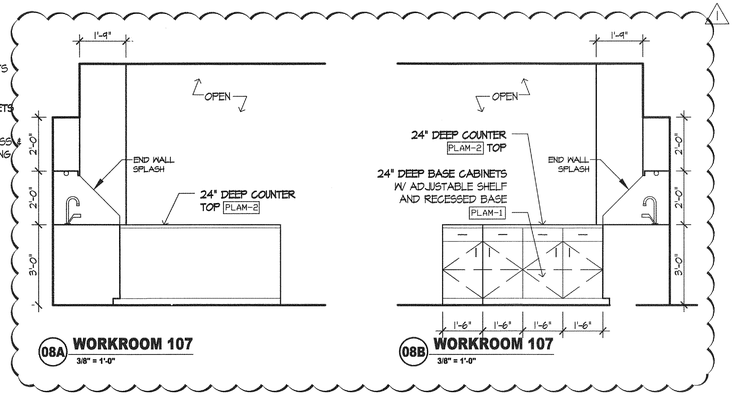

08A WORKROOM 107
3/8" = 1'-0"

08B WORKROOM 107
3/8" = 1'-0"

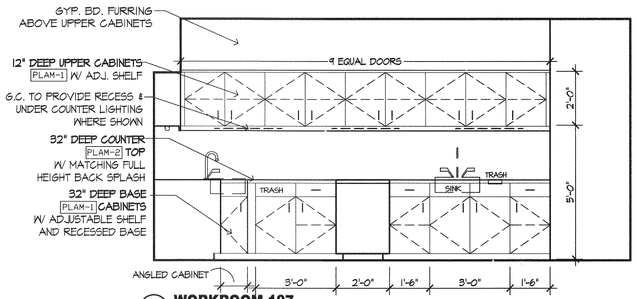

09 WORKROOM 107
3/8" = 1'-0"

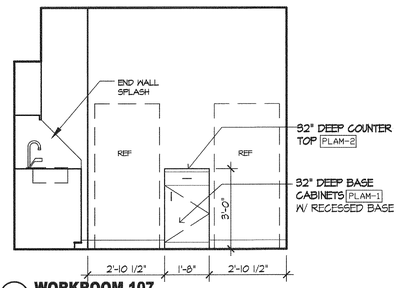

10 WORKROOM 107
3/8" = 1'-0"

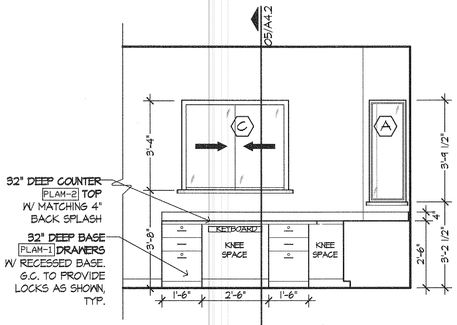

11 RECEPTION 103
3/8" = 1'-0"

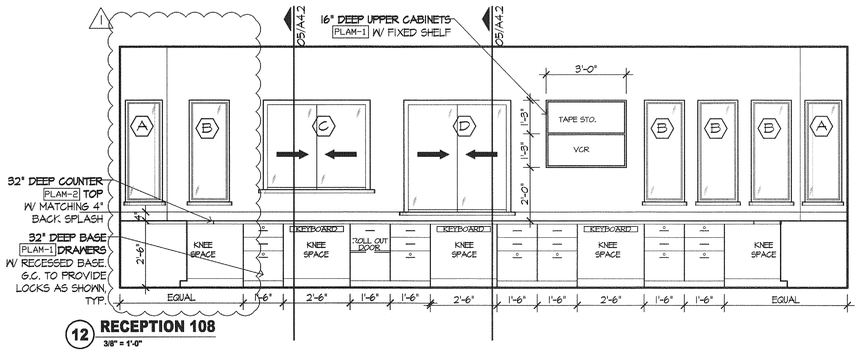

12 RECEPTION 108
3/8" = 1'-0"

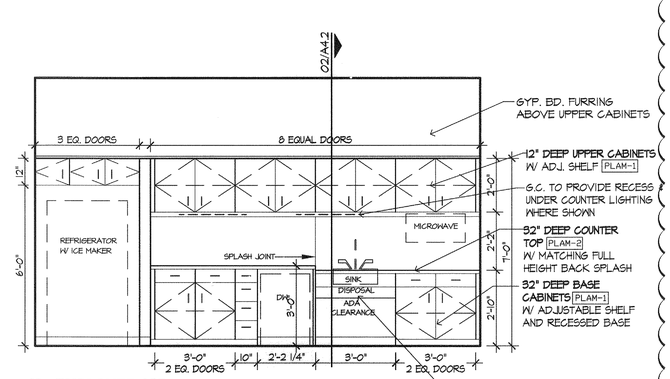

13 EMPLOYEE 135
3/8" = 1'-0"

MILLWORK NOTES:

-ALL MILLWORK TO BE PLAM-1 EXCEPT FOR COUNTERTOP WHICH IS TO BE PLAM-2

-RUBBER COVED BASE RBC-1 THROUGHOUT

-ALL WALLS TO BE PAINTED PT-1 U.N.O.

-ALL OUTSIDE CORNERS ON ALL TOPS SHALL HAVE A 2" RADIUS EDGE WHERE EXPOSED

-BRUSHED STAINLESS METAL WIRE PULLS ON ALL CABINETS AND DRAWERS

-DRAWERS SHALL HAVE KV-8400 FULL EXTENSION SLIDES

-CABINETS SHALL HAVE A .020 WHITE LINER OR BETTER, .050 LAMINATE OR BETTER TOPS & SPLASHES, AND .030 LAMINATE OR BETTER ON ALL VERTICALS

-ALL FILE DRAWERS MUST BE EQUIPPED TO FIT STANDARD PENDAFLEX FILE FOLDERS

NO.	DATE	REVISIONS	BY
1	01-29-08	OWNER REVISIONS	

CONTRACTOR SHALL VERIFY ALL DIMENSIONS AT THE JOB SITE AND NOTIFY THE ARCHITECTS OF ANY DIMENSIONAL ERRORS, OMISSIONS OR DISCREPANCIES BEFORE BEGINNING OR FABRICATING ANY WORK
DO NOT SCALE DRAWINGS

linear!
the architecture of Kemery Brundige and Young
5005 W Royal Lane Suite 144
Irving, TX 75063
Phone: 972.929.9226
Fax: 972.929.9051
info@linear-architecture.com

COOK CHILDREN'S
PRIMARY CARE CLINIC
FT. WORTH, TX

JOB NUMBER
07.210

SHEET TITLE
INTERIOR & EXTERIOR ELEVATIONS

SHEET NUMBER
A4.1

DATE OF ORIGINAL ISSUE
© 29 NOVEMBER 2007