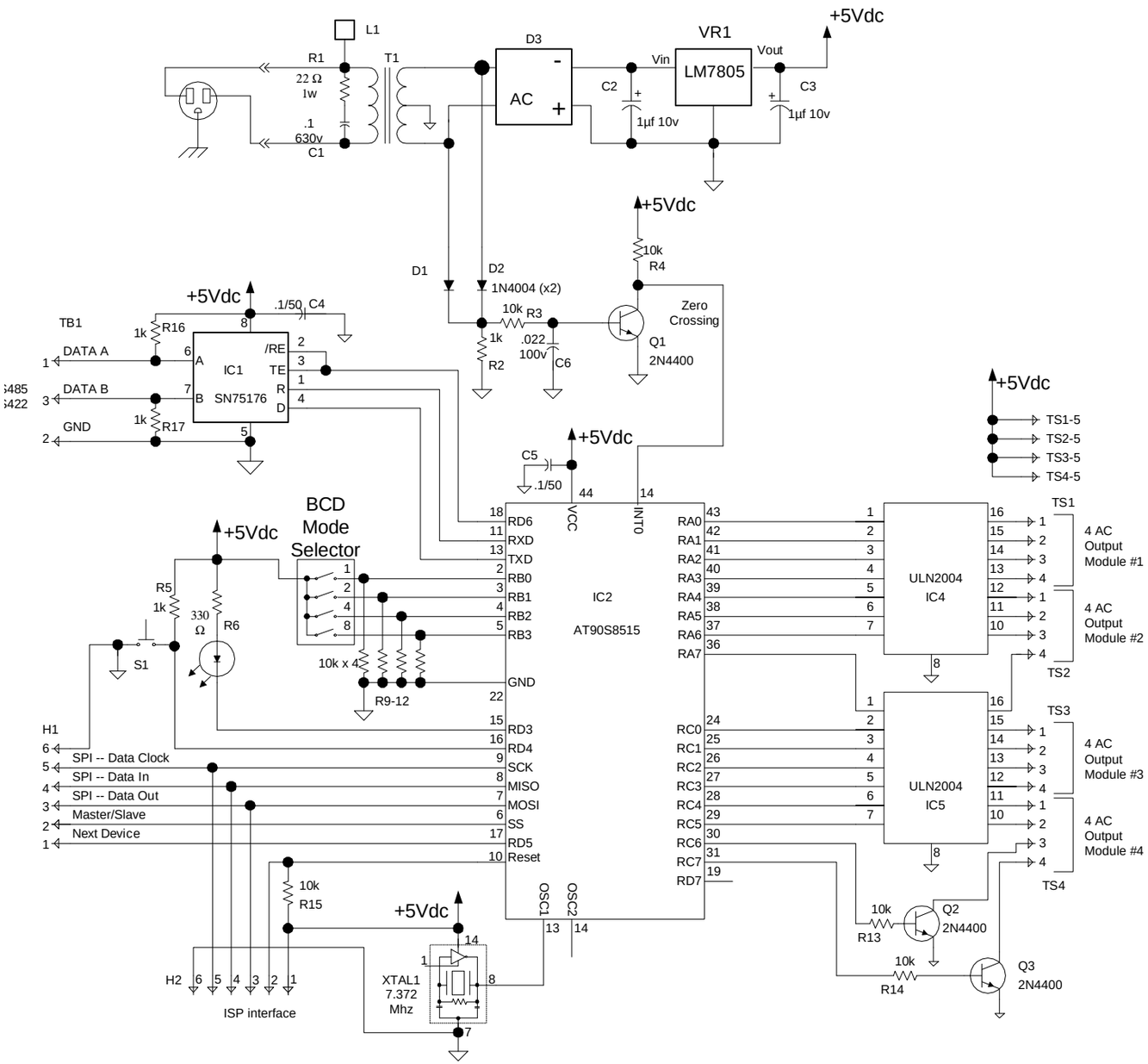

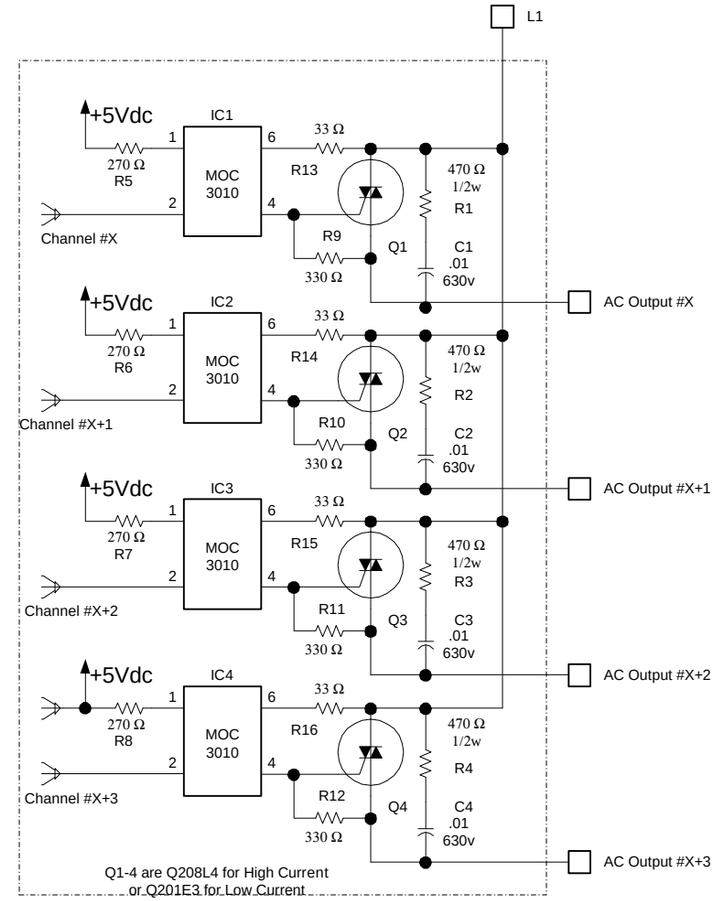

4 Channel AC output
Miodule

Title: Logic Schematic for Sign Art
Drawn by: Mike Bechtold
Date: 9-9-1999