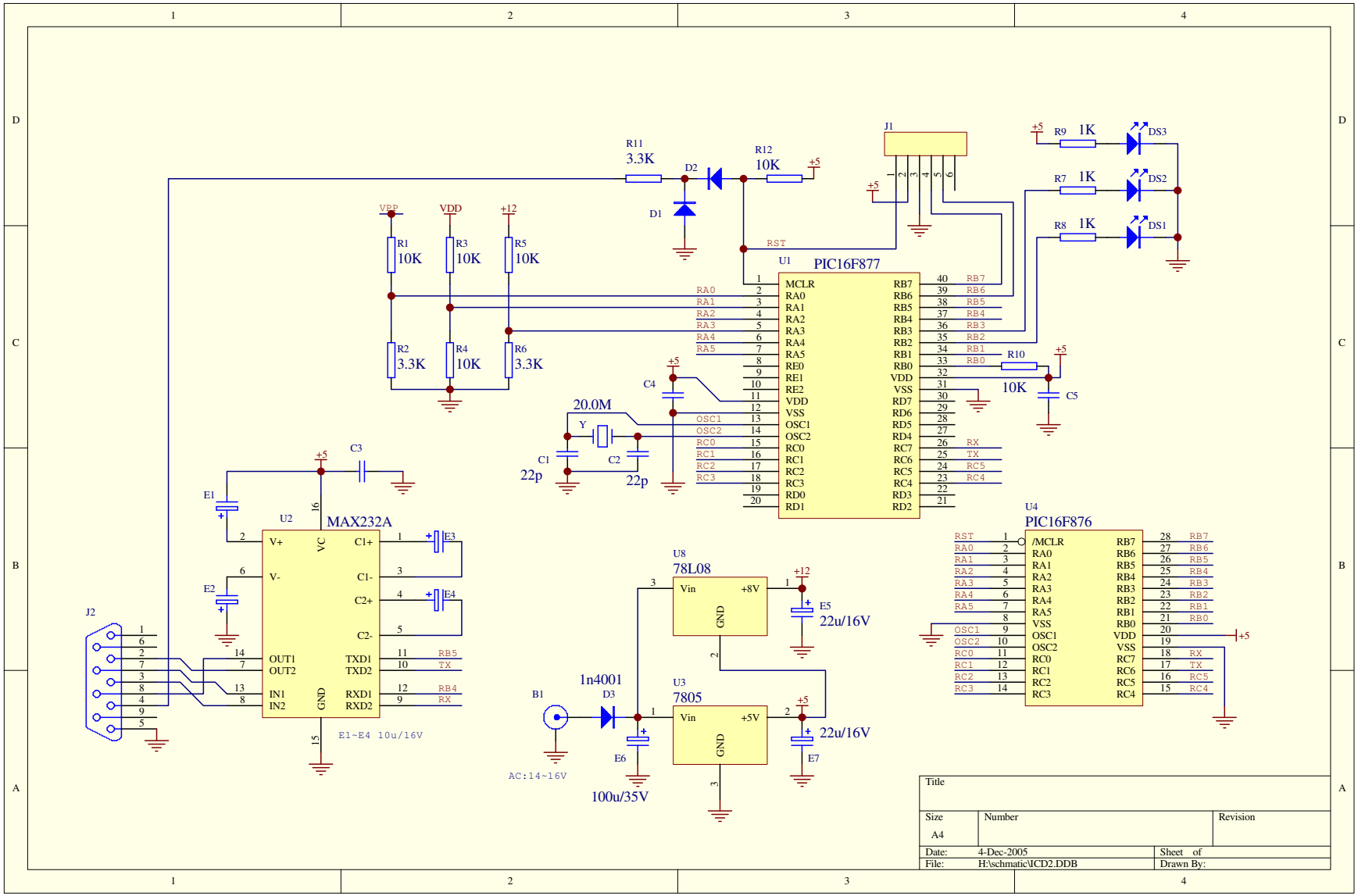
U1
PIC16F877
MCLR
RA0
RA1
RA2
RA3
RA4
RA5
RE0
RE1
RE2
VDD
VSS
OSC1
OSC2
RC0
RC1
RC2
RC3
RD0
RD1
RB7
RB6
RB5
RB4
RB3
RB2
RB1
RB0
RD7
RD6
RD5
RD4
RC7
RC6
RC5
RC4
RD3
RD2
U4
PIC16F876
/MCLR
U2
MAX232A
V+
V-
C1+
C1-
C2+
C2-
OUT1
OUT2
IN1
IN2
TXD1
TXD2
RXD1
RXD2
VC
GND
U8
78L08
Vin
+8V
U3
7805
+5V
J1
J2
B1
D1
D2
D3
Y
20.0M
C1
C2
C3
C4
C5
E1
E2
E3
E4
E5
E6
E7
R1
R2
R3
R4
R5
R6
R7
R8
R9
R10
R11
R12
DS1
DS2
DS3
1n4001
22p
10K
1K
3.3K
VPP
VDD
+12
+5
RST
RX
TX
RB5
RB4
RC5
RC4
E1~E4 10u/16V
AC:14~16V
100u/35V
22u/16V
Title
Size
A4
Number
Revision
Date:
4-Dec-2005
Sheet of
File:
H:\schmatic\ICD2.DDB
Drawn By: