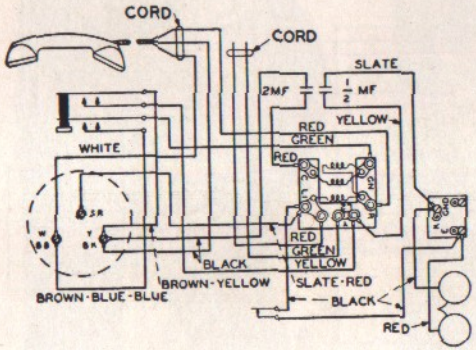

MANUAL SERVICE

Wiring Diagram
No. 305AW Telephone

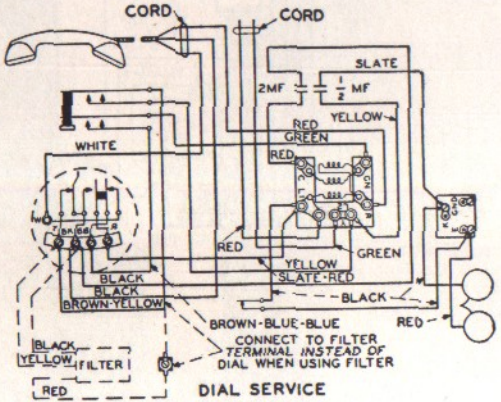

DIAL SERVICE

Wiring Diagram
Nos. 305BW, CW and DW