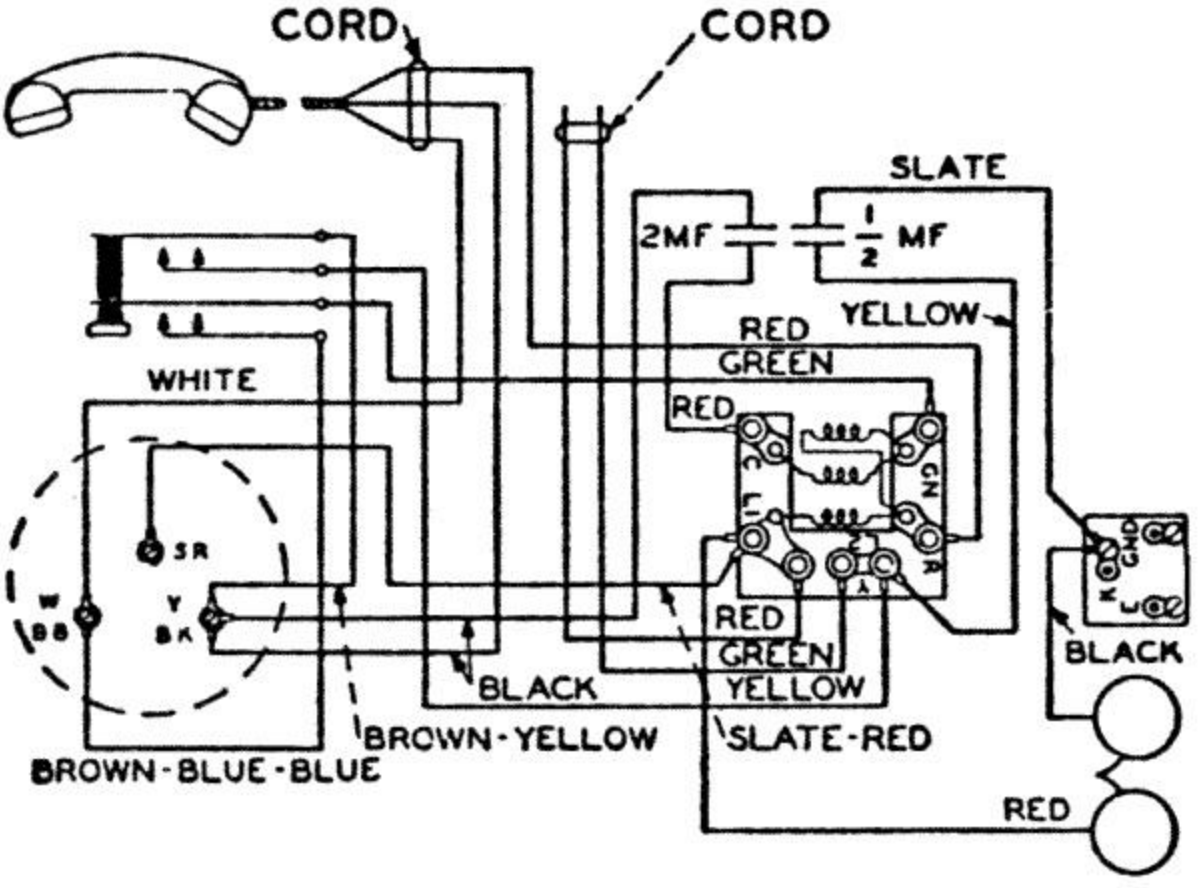

MANUAL SERVICE

No. 302AW Telephone