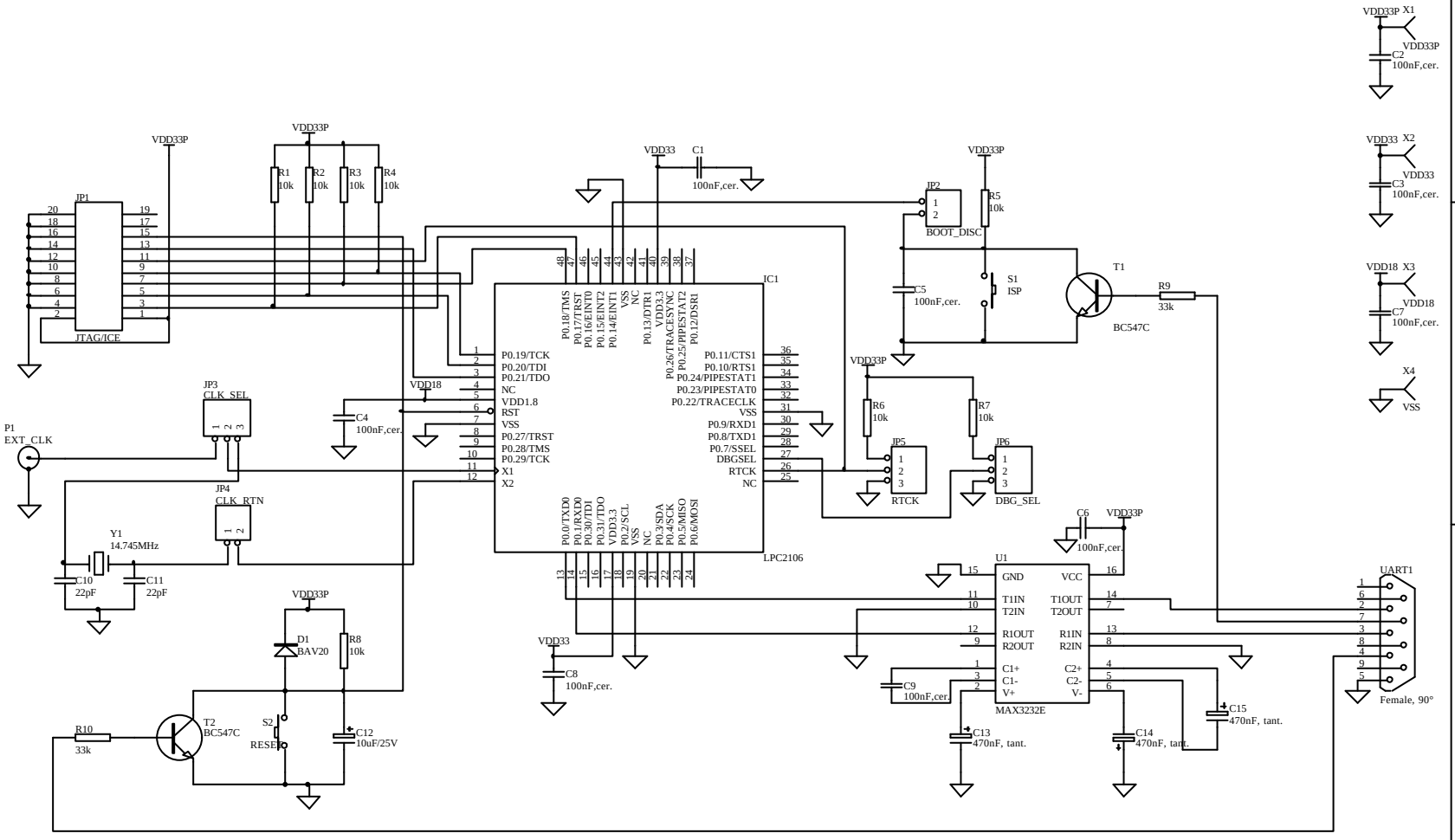

Philips Semiconductors GmbH
Product Engineering
Business Line Microcontrollers
Georg-Heyken-Straße 1
21147 Hamburg

Netchip Test Board

Size	FCSM No.	DWG No.	Rev
A3			

Scale		Sheet
		1 of 1