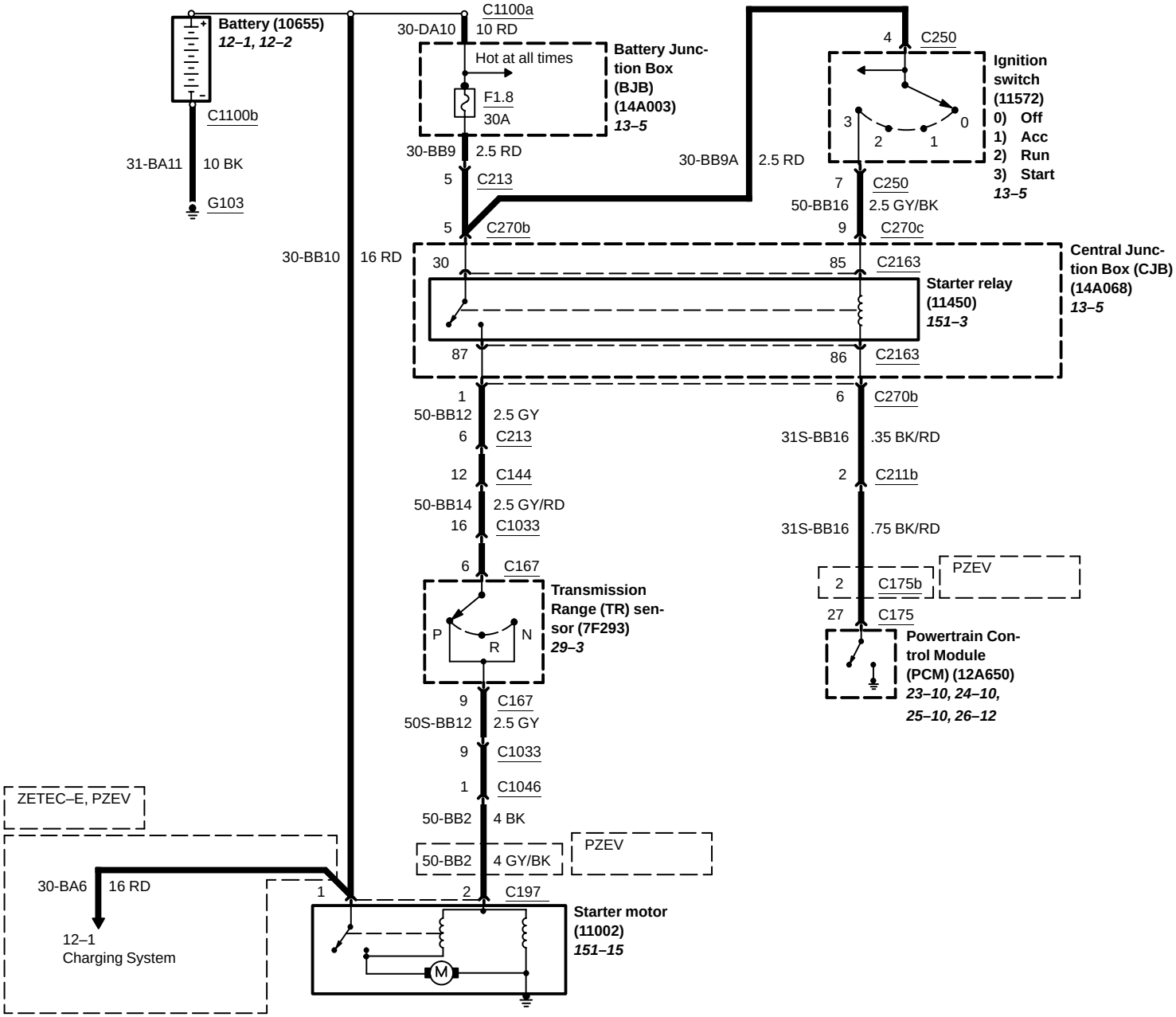Automatic transmission