Duratec–ST

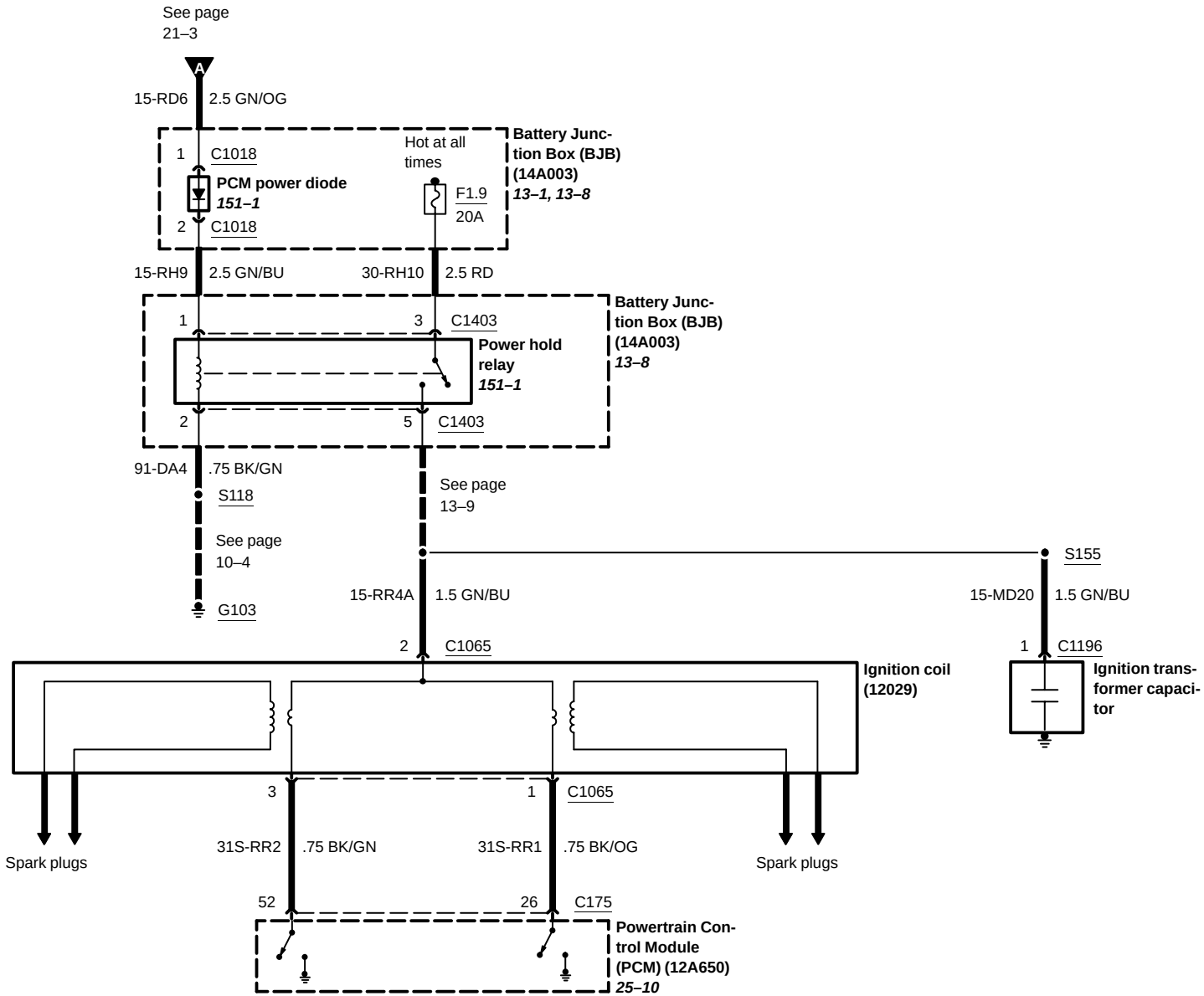
See page
21–3
A
15-RD6
2.5 GN/OG
1
C1018
PCM power diode
151–1
2
C1018
Hot at all
times
F1.9
20A
Battery Junc-
tion Box (BJB)
(14A003)
13–1, 13–8
15-RH9
2.5 GN/BU
30-RH10
2.5 RD
1
3
C1403
Power hold
relay
151–1
2
5
C1403
Battery Junc-
tion Box (BJB)
(14A003)
13–8
91-DA4
.75 BK/GN
S118
See page
10–4
G103
See page
13–9
S155
15-RR4A
1.5 GN/BU
15-MD20
1.5 GN/BU
2
C1065
1
C1196
Ignition coil
(12029)
Ignition trans-
former capaci-
tor
3
1
C1065
Spark plugs
31S-RR2
.75 BK/GN
31S-RR1
.75 BK/OG
Spark plugs
52
26
C175
Powertrain Con-
trol Module
(PCM) (12A650)
25–10