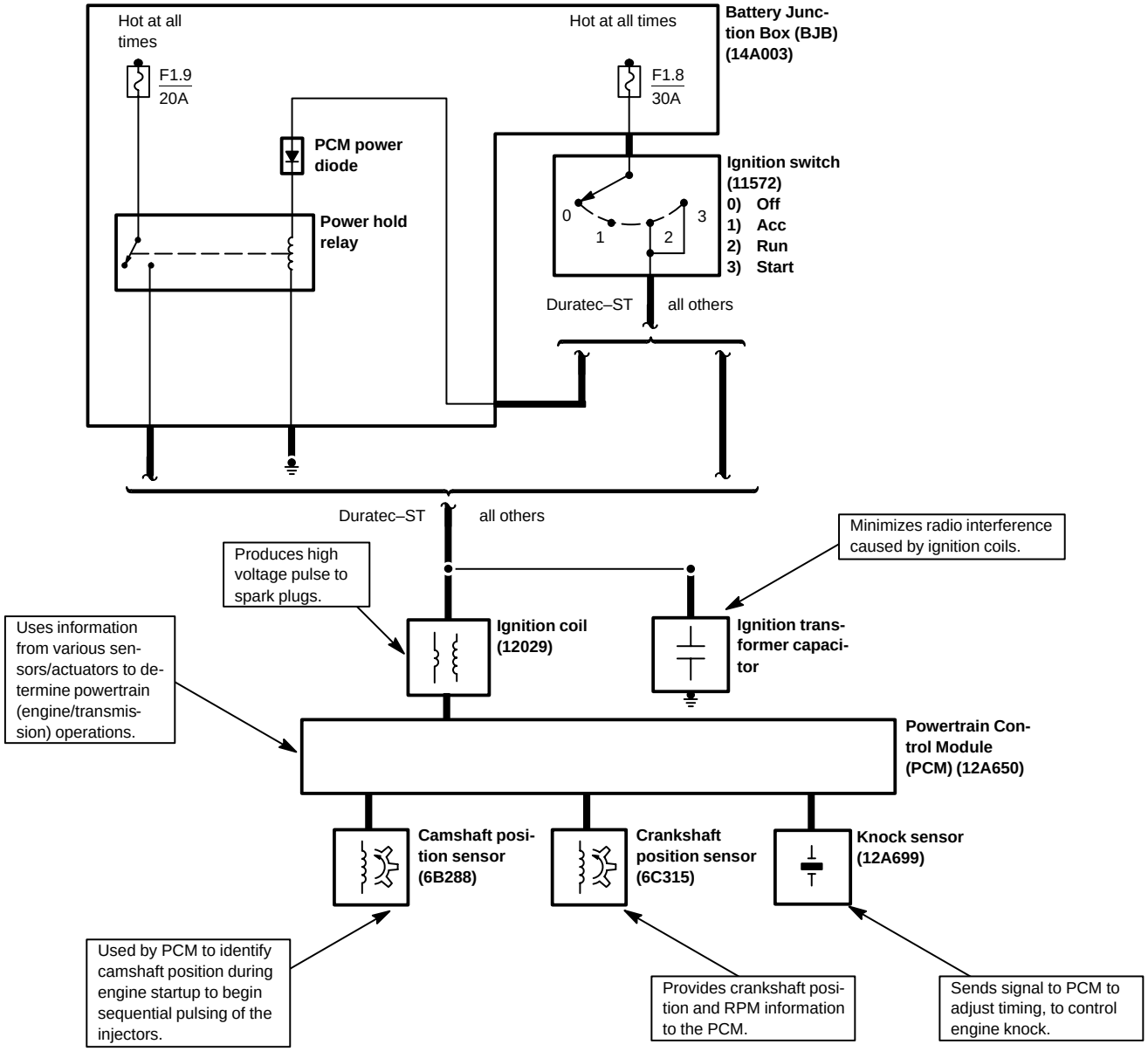System overview