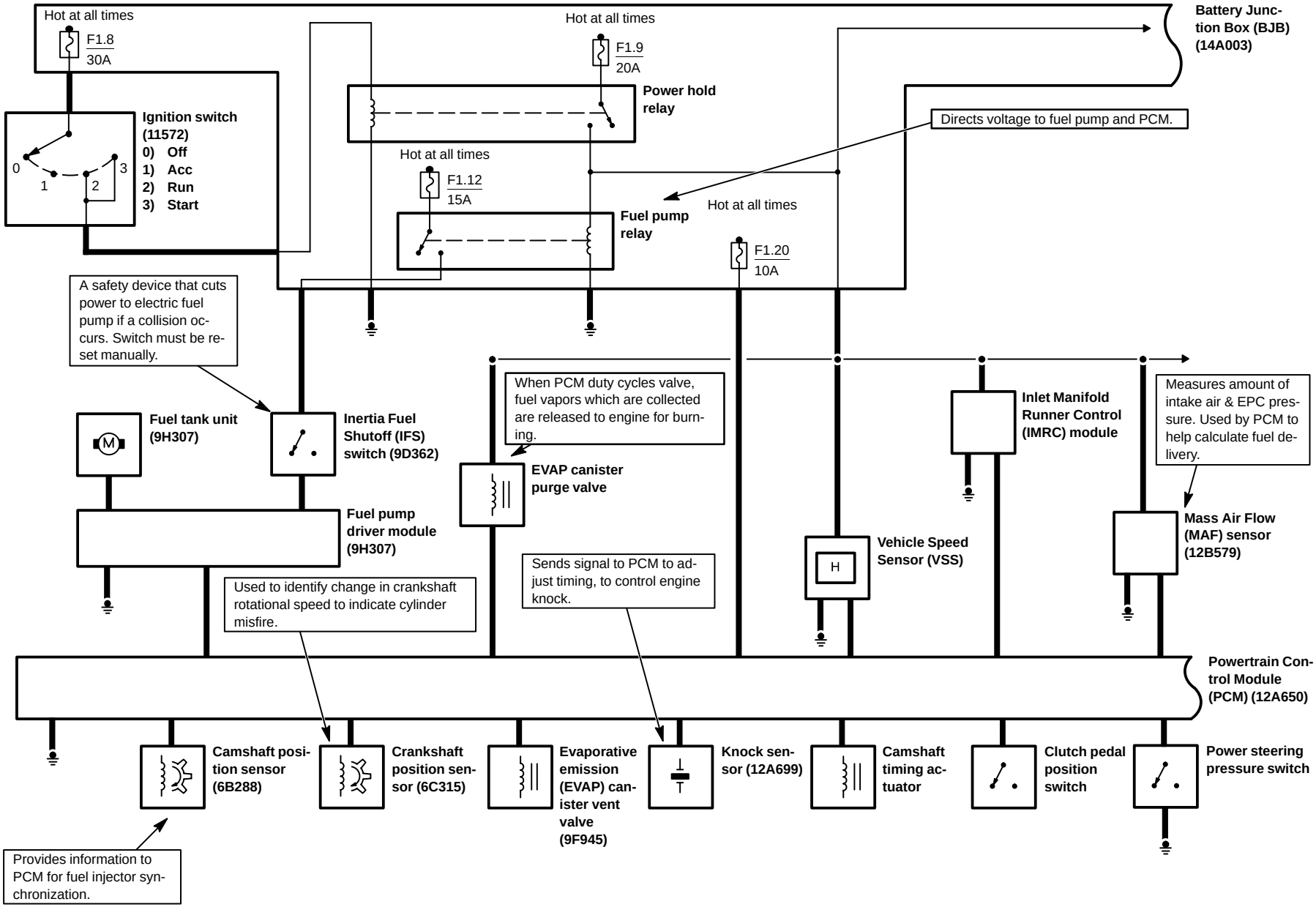System overview, Duratec–ST