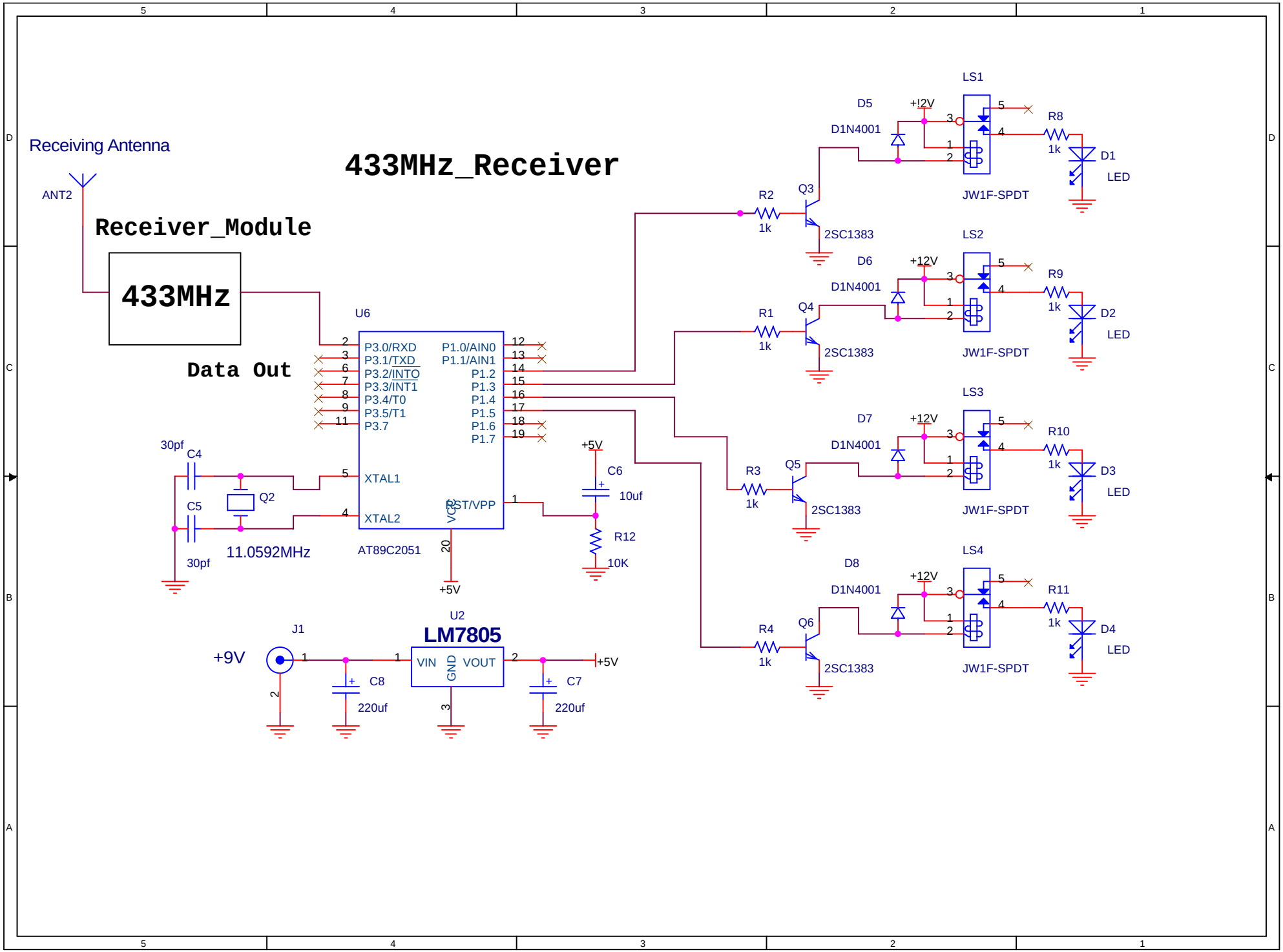
433MHz_Receiver
Receiving Antenna
ANT2
Receiver_Module
433MHz
Data Out
U6
P3.0/RXD
P3.1/TXD
P3.2/INTO
P3.3/INT1
P3.4/T0
P3.5/T1
P3.7
P1.0/AIN0
P1.1/AIN1
P1.2
P1.3
P1.4
P1.5
P1.6
P1.7
XTAL1
XTAL2
RST/VPP
VCC
AT89C2051
30pf
C4
C5
Q2
11.0592MHz
+5V
C6
10uf
R12
10K
J1
+9V
U2
LM7805
VIN
GND
VOUT
C8
220uf
C7
220uf
LS1
LS2
LS3
LS4
D5
D6
D7
D8
D1N4001
+12V
R1
R2
R3
R4
1k
Q3
Q4
Q5
Q6
2SC1383
R8
R9
R10
R11
D1
D2
D3
D4
LED
JW1F-SPDT