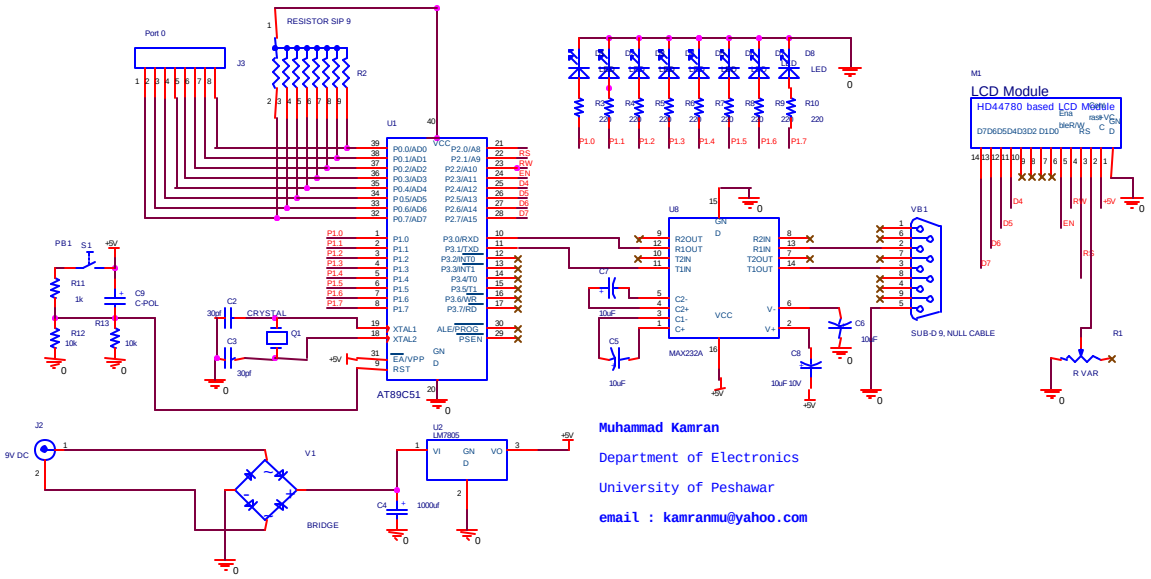

Muhammad Kamran

Department of Electronics

University of Peshawar

email : kamranmu@yahoo.com