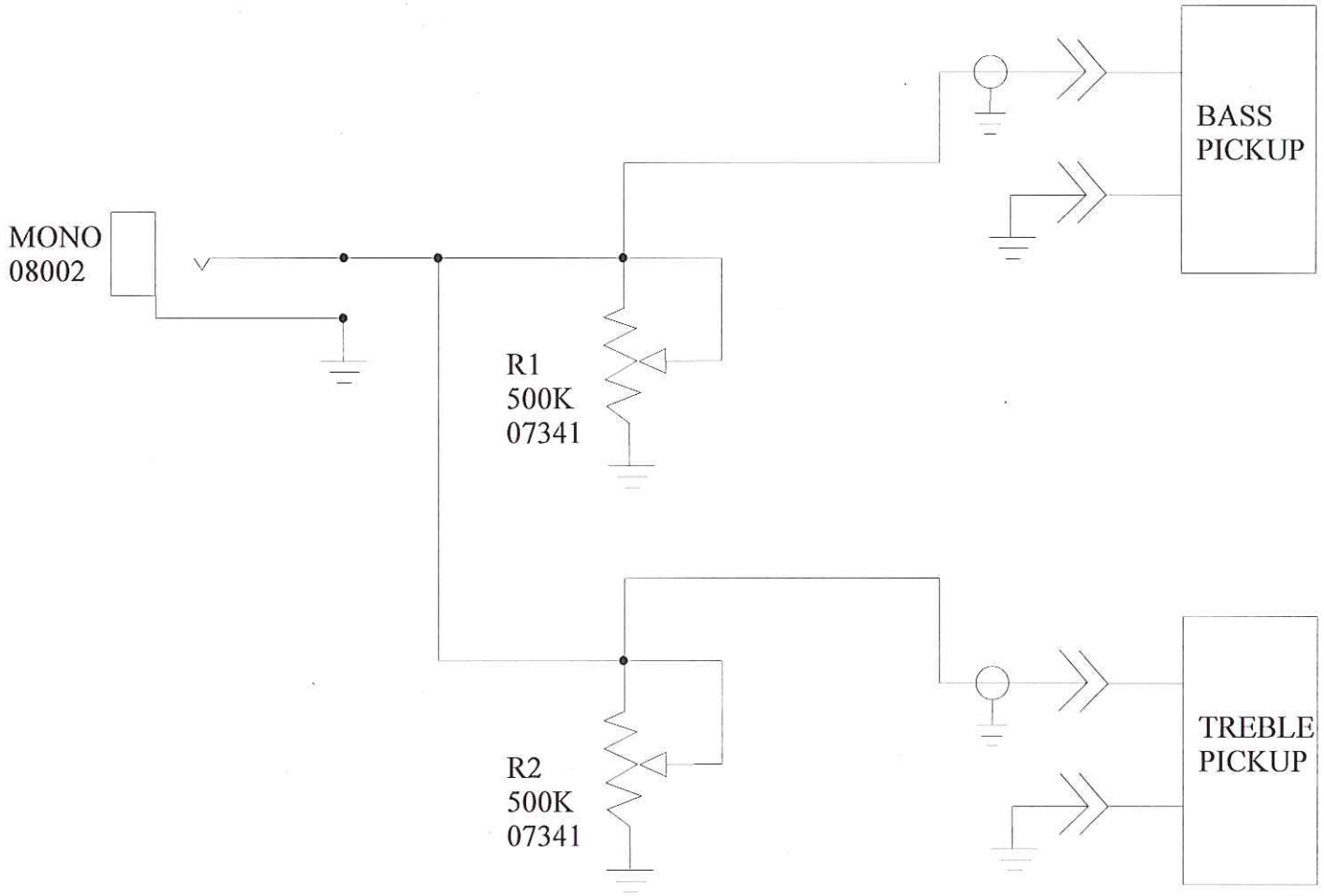

2 PICKUP 2 VOLUME NO SWITCH BASS