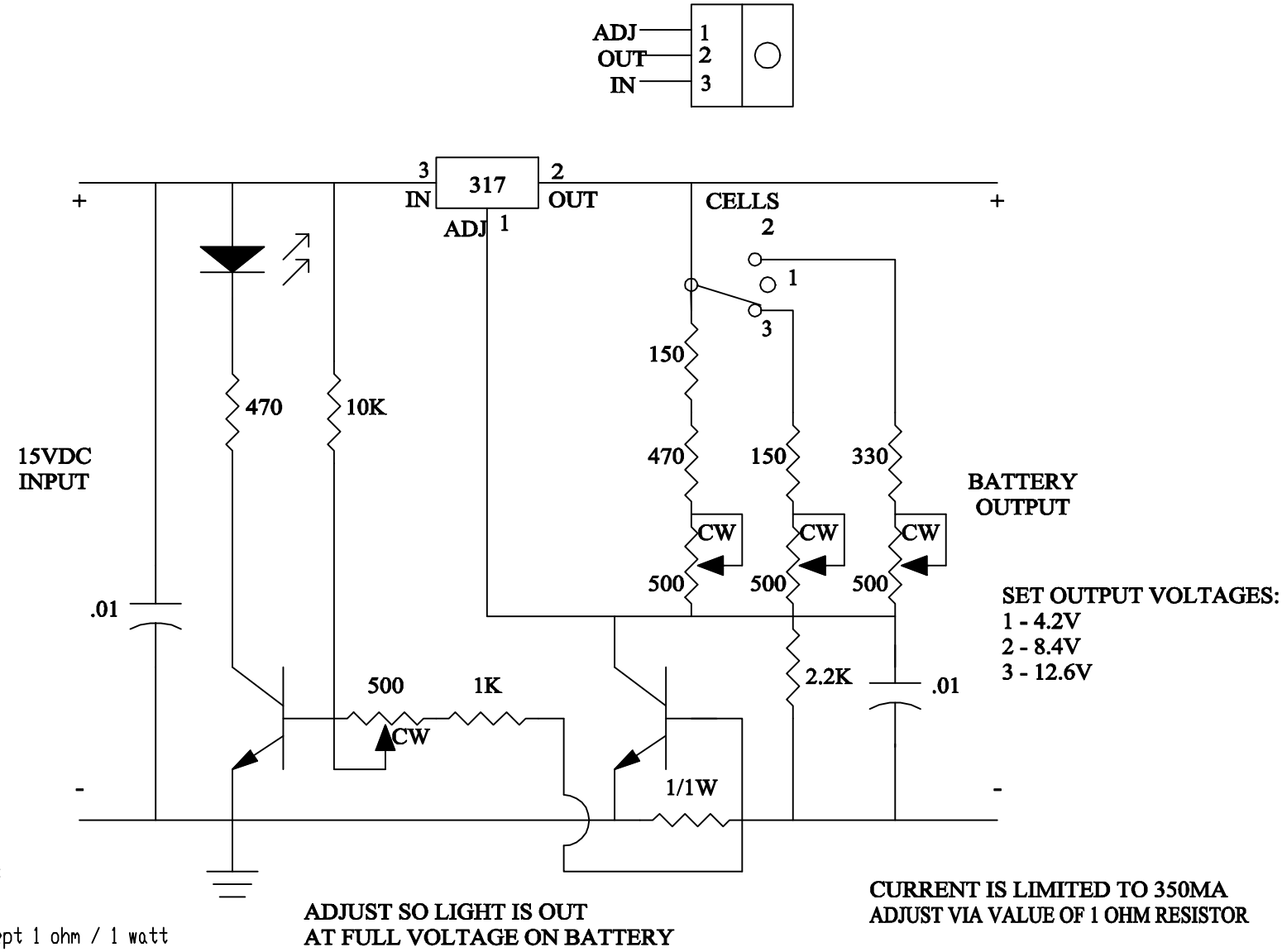

Component Notes

All resistors 1/4W except 1 ohm / 1 watt

LM317 is adjustable voltage regulator, mount on heatsink

Transistors 2N2222 or 2N3904, etc.

Lithium-Ion Charger
4-24-2002
Gene Bond